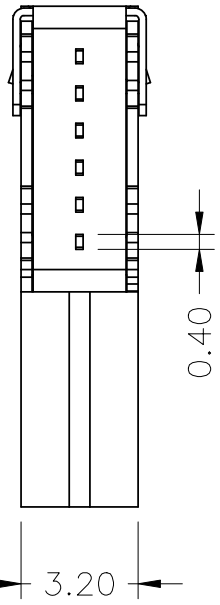

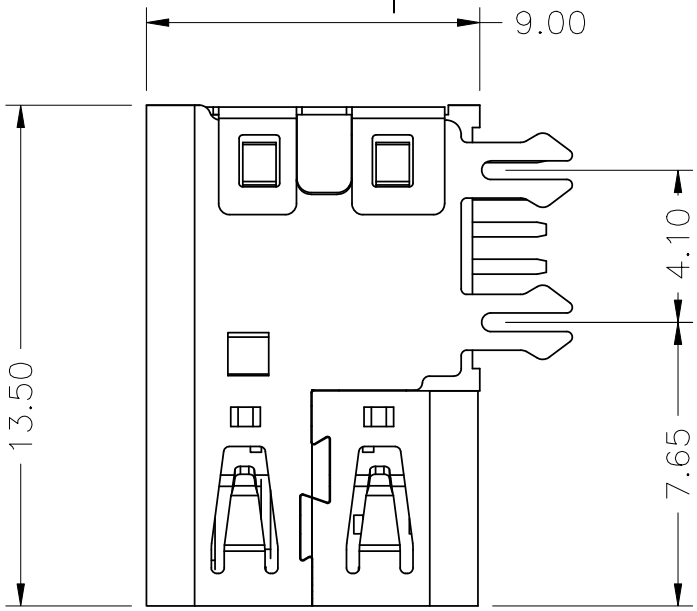

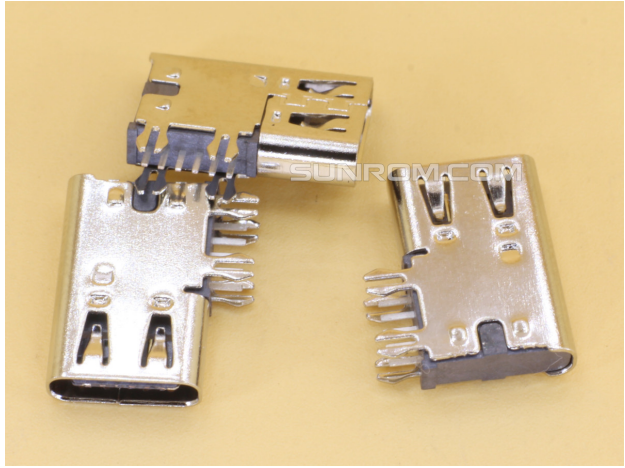

A1	GND	B12	GND
A4	VBUS	B9	VBUS
A5	CC1	~~B7~~	
~~A6~~		~~B6~~	
~~A7~~		B5	CC2
A9	VBUS	B4	VBUS
A12	GND	B1	GND
PIN	SIGNAL NAME	PIN	SIGNAL NAME

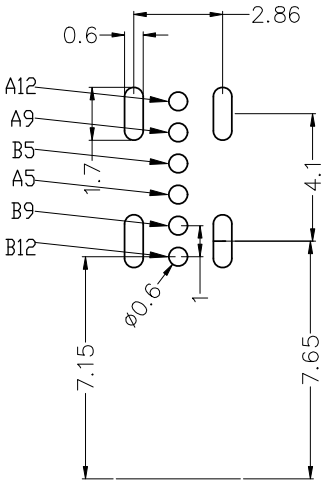

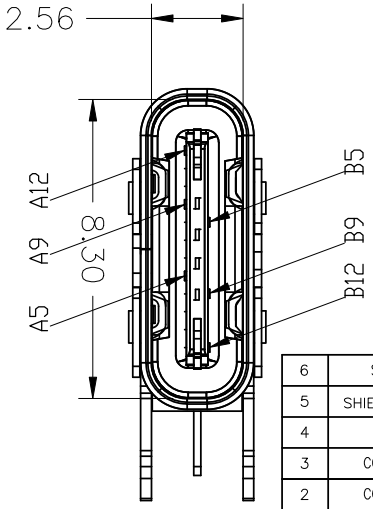

ELECTRICAL :
1. CONTACT CURRENT RATING :
3A(VBUS PIN 1.5A/PIN MAX),
3A(GND PIN 1.25A/PIN MAX),0.25A/PIN
(OTHER PIN).
2. INSULATION RESISTANCE :
100 MEGAOHMS MIN. AT 250VDC.
3. DIEELECTRIC WITHSTANDING VOLTAGE :
100VAC MIN.
4. LOW LEVEL CONTACT RESISTANCE :
INITIAL 40mΩ MAX.
AFTER 50mΩ MAX.

MECHANICAL CHARACTERISTICS :
1. MATING FORCE: 5~20N.;
2. UNMATING FORCE: 6~20N(INITIAL),
3. OPERATING TEMPERATURE :-40° C TO +80° C

NO.	DESCRIPTION	MATERIAL	REMARKS	QTY
6	SHELL	STAINLESS STEEL	NI Plated	1PCS
5	SHIELDING PLATE	STAINLESS STEEL	---	1PCS
4	MD	HIGH TEMPERATURE PLASTIC	BLACK	1PCS
3	CONTACT	COPPER ALLOY	Au/NI Plated	1SET
2	CONTACT	COPPER ALLOY	Au/NI Plated	1SET
1	HOUSING	HIGH TEMPERATURE PLASTIC	BLACK	1PCS

RECOMMENDED P.C.B. LAYOUT
TOLERANCE UNSPECIFIED ±0.05mm

SUNROM.COM

PRODUCT NAME
USB Type-C 6P USB Horizontal Through Hole for Power Only

PRODUCT CODE	PRODUCT URL	DATE
7903	https://www.sunrom.com/m/7903	15/06/2025